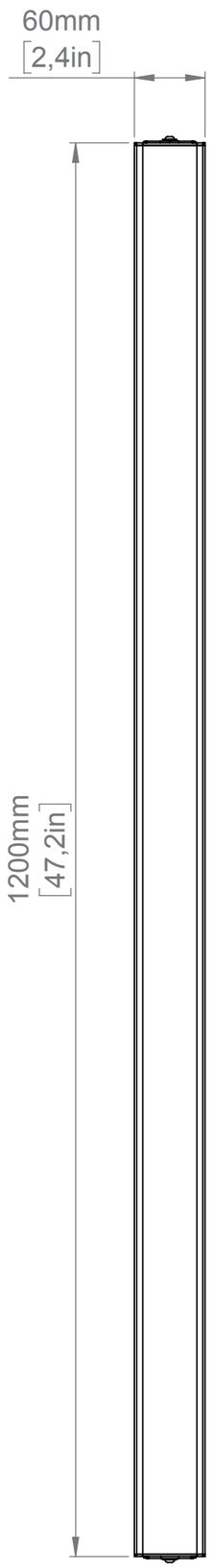

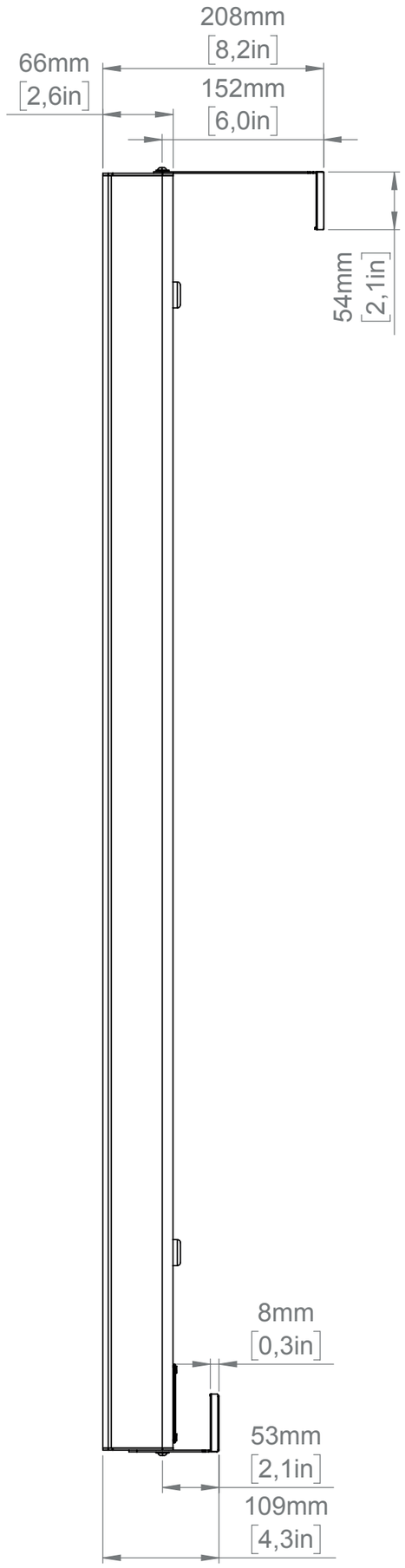

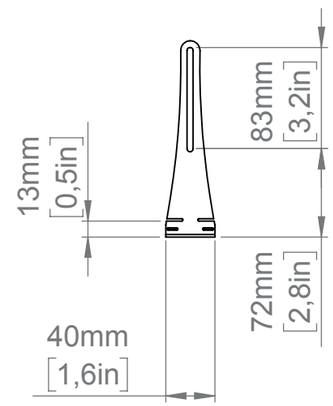

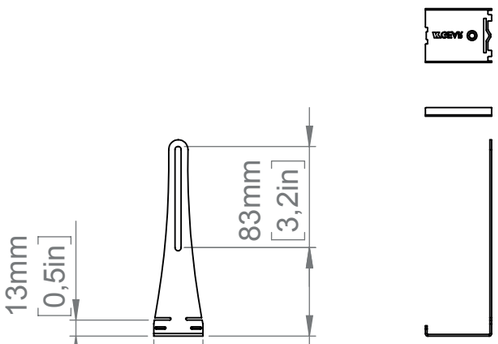

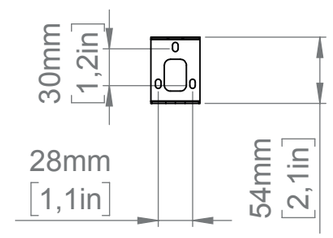

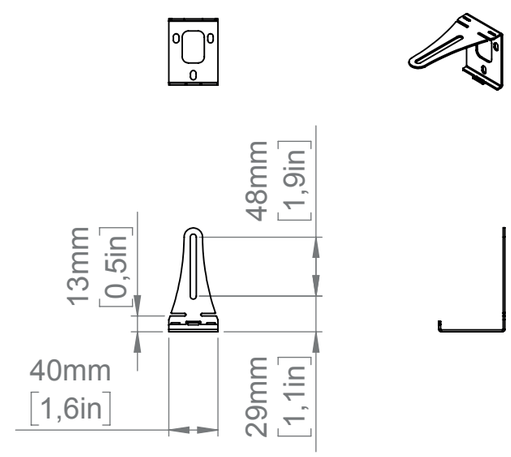

KGEAR
Smart Audio Solutions